affect small governments, as described in the Unfunded Mandates Reform Act of 1995 (Pub. L. 104–4).

This proposed rule also does not have tribal implications because it will not have a substantial direct effect on one or more Indian tribes, on the relationship between the Federal Government and Indian tribes, or on the distribution of power and responsibilities between the Federal Government and Indian tribes, as specified by Executive Order 13175 (65 FR 67249, November 9, 2000). This action also does not have Federalism implications because it does not have substantial direct effects on the States, on the relationship between the national government and the States, or on the distribution of power and responsibilities among the various levels of government, as specified in Executive Order 13132 (64 FR 43255, August 10, 1999). This action merely proposes to approve a state rule implementing a Federal standard, and does not alter the relationship or the distribution of power and responsibilities established in the Clean Air Act. This proposed rule also is not subject to Executive Order 13045 ''Protection of Children from Environmental Health Risks and Safety Risks'' (62 FR 19885, April 23, 1997), because it is not economically significant.

In reviewing SIP submissions, EPA's role is to approve state choices, provided that they meet the criteria of the Clean Air Act. In this context, in the absence of a prior existing requirement for the State to use voluntary consensus standards (VCS), EPA has no authority to disapprove a SIP submission for failure to use VCS. It would thus be inconsistent with applicable law for EPA, when it reviews a SIP submission, to use VCS in place of a SIP submission that otherwise satisfies the provisions of the Clean Air Act. Thus, the requirements of section 12(d) of the National Technology Transfer and Advancement Act of 1995 (15 U.S.C. 272 note) do not apply. This proposed rule does not impose an information collection burden under the provisions of the Paperwork Reduction Act of 1995 (44 U.S.C. 3501 *et seq.*).

List of Subjects

40 CFR Part 52

Environmental protection, Air pollution control, Incorporation by reference, Intergovernmental relations, Particulate matter, Reporting and recordkeeping requirements.

40 CFR Part 81

Environmental protection, Air pollution control, National parks, Wilderness areas.

Dated: July 23, 2003.

Ronald A. Kreizenbeck,

Acting Regional Administrator, EPA, Region 10.

[FR Doc. 03–19355 Filed 7–29–03; 8:45 am]

BILLING CODE 6560–50–P

DEPARTMENT OF COMMERCE

National Oceanic and Atmospheric Administration

50 CFR Part 223

[Docket No. 030725185–3185–01; I.D.071403B]

RIN 0648–AR34

Endangered and Threatened Wildlife; Sea Turtle Conservation Requirements

AGENCY: National Marine Fisheries Service (NMFS), National Oceanic and Atmospheric Administration (NOAA), Commerce.

ACTION: Proposed rule; request for comments.

SUMMARY: The National Marine Fisheries Service (NMFS) proposes to amend the regulations that require most shrimp trawlers to use Turtle Excluder Devices (TEDs) in the southeastern Atlantic, including the Gulf of Mexico, to reduce the incidental capture of endangered and threatened sea turtles during shrimp trawling. Specifically, NMFS proposes to allow the use of a specific design of a hooped hard TED (''the Coulon TED'') that is capable of releasing large loggerhead and green turtles as well as leatherback turtles.

DATES: Written comments (see **ADDRESSES**) will be accepted through August 14, 2003.

ADDRESSES: Written comments on this action should be addressed to the Chief, Endangered Species Division, Office of Protected Resources, NMFS, by regular mail to 1315 East-West Highway, Silver Spring, MD 20910 or by fax to 301–713–0376. Comments will not be accepted if submitted via e-mail or the Internet.

FOR FURTHER INFORMATION CONTACT: Robert Hoffman (ph. 727–570–5312, fax 727–570–5517, e-mail Robert.Hoffman@noaa.gov), or Barbara A. Schroeder (ph. 301–713–1401, fax 301–713–0376, e-mail *Barbara.Schroeder@noaa.gov*).

SUPPLEMENTARY INFORMATION:

Background

All sea turtles that occur in U.S. waters are listed as either endangered or threatened under the Endangered Species Act of 1973 (ESA). The Kemp's ridley (*Lepidochelys kempii*), leatherback (*Dermochelys coriacea*), and hawksbill (*Eretmochelys imbricata*) are listed as endangered. The loggerhead (Caretta caretta) and green (*Chelonia mydas*) turtles are listed as threatened, except for breeding populations of green turtles in Florida and on the Pacific coast of Mexico, which are listed as endangered.

Sea turtles are incidentally taken and killed as a result of trawling activities in the Gulf of Mexico and along the Atlantic seaboard. Under the ESA and its implementing regulations, taking sea turtles is prohibited, with exceptions identified in 50 CFR 223.206. The incidental taking of turtles during shrimp or summer flounder trawling is exempted from the taking prohibition of section 9 of the ESA if the conservation measures specified in the sea turtle conservation regulations (50 CFR part 223) are followed. The regulations require most shrimp trawlers and summer flounder trawlers operating in the southeastern United States (Atlantic Area, Gulf Area, and summer flounder sea turtle protection area) to have a NMFS-approved Turtle Excluder Device (''TED'') installed in each net that is rigged for fishing to provide for the escape of sea turtles. TEDs currently approved by NMFS include single-grid hard TEDs and hooped hard TEDs conforming to a generic description, the flounder TED, and one type of soft TED the Parker soft TED. Hooped hard TEDs are currently approved for use only in the inshore waters of the Atlantic. Effective August 21, 2003, hooped hard TEDs will be approved for use in inshore waters of the Gulf Area as well.

TEDs incorporate an escape opening, usually covered by a webbing flap, that allows sea turtles to escape from trawl nets. To be approved by NMFS, a TED design must be shown to be 97 percent effective in excluding sea turtles during testing based upon specific testing protocols (55 FR 41092, October 9, 1990). Most approved hard TEDs are described in the regulations (50 CFR 223.207 (a)) according to generic criteria based upon certain parameters of TED design, configuration, and installation, including height and width dimensions of the TED opening through which the turtles escape.

February 21, 2003, Amendment to the Sea Turtle Conservation Regulations

On February 21, 2003, NMFS issued a final rule (68 FR 8456), amending the sea turtle conservation regulations to protect large loggerhead, green, and leatherback sea turtles. The final rule became effective April 15, 2003, with the exception of the Gulf Area where it will become effective on August 21, 2003. It requires that all shrimp trawlers fishing in the offshore waters of the southeastern United States (Atlantic Area and Gulf Area) and the inshore waters of Georgia and South Carolina use either a double cover flap TED, a single-grid hard TED with a 71–inch (180–cm) opening, or a Parker soft TED with a 96–inch (244–cm) opening in each net rigged for fishing. In inshore waters, except those of Georgia and South Carolina, the rule allows the use of a single-grid hard TED with a 44–inch (112–cm) opening, a Parker soft TED with a 56–inch (142–cm) opening, and a hooped hard TED with a 35–inch (89–cm) by 27–inch (69–cm) escape opening.

Since publication of the final rule (68 FR 8456, February 21, 2003), NMFS tested a new hooped hard TED design developed in Louisiana (this hooped hard TED is called the Coulon TED) that contains a larger escape opening than the hooped hard TED design used in inshore waters. Louisiana fishermen prefer the Coulon TED due to its higher shrimp retention, and its efficiency and quickness in releasing both turtles and fish bycatch. Because of the desire of fishermen to continue to use this style of TED and their assertion that it could indeed be made large enough to release leatherback turtles, the Southeast Fisheries Science Center's Harvesting Systems and Engineering Branch worked with the inventor of the Coulon TED and fishermen who use it to develop and test a large Coulon style TED to evaluate its ability to release large loggerhead, green, and leatherback turtles.

Large Hooped Hard TED Testing

NMFS tested the large Coulon style TED using testing protocols designed to evaluate a TED's ability to release large turtles. The protocols were developed during the testing and approval of the double cover TED (66 FR 24287, May 14, 2001). NMFS used the average carapace measurements of 15 nesting female leatherback turtles to construct a pipe-framed model of a leatherback turtle. This model measured 40 inches wide by 21 inches (102 cm by 53 cm) deep. The test was performed by a diver swimming repeatedly through the trawl with the model and pushing it through the TED opening. During these tests, the diver was able to push the model through the opening with ease. When the model was inverted (simulating the dorsal surface of the turtle oriented against the TED frame), the diver was still able to push the model through the opening with ease.

A large Coulon style TED with a hinged door covering the escape opening to within 12 inches (30 cm) from the back edge of the opening was also tested to determine its ability to release small turtles. The small turtle protocol calls for the release of 25 turtles, released one at a time, into a trawl towed at 2.5 knots. Each turtle is given 5 minutes to escape; if the turtle does not escape within 5 minutes, it is retrieved by divers and is considered to have been captured. The capture rate is then compared to that of a control TED (in this case a top opening double cover flap TED).

During the week of June 22, 2003, 25 small turtles were exposed to the large Coulon style TED with a hinged door and all 25 turtles escaped quickly and easily. The Southeast Fisheries Science Center's Harvesting Systems and Engineering Branch believes that this particular configuration of the large Coulon style TED would be the most difficult for small turtles to escape from because of the weight and size of the door. However, when compared to the control TED, the average escape times did not differ significantly; the average escape time for the control TED was 62 seconds compared to 68 seconds for the Coulon style TED with the hinged door.

Based upon the tests described above, NMFS determined that the large Coulon style TED meets the regulatory turtle release rate requirement.

Provisions of the Proposed Rule

NMFS proposes to allow a specific design of a hooped hard TED for offshore use, along with allowable modifications for hooped hard TEDs. The offshore hooped hard TED must meet certain minimum construction standards, in addition to the construction standards specified for hard TEDs generally. The frame for this TED must be made of aluminum rod a minimum of 5/8 inch (1.59 cm) in diameter or aluminum tubing a minimum of 1 inch (2.54 cm) in diameter with a minimum wall thickness of 1/8 inch (0.32 cm). The escape opening must have a horizontal measurement of no less than 40 inches (102 cm) wide and a forward measurement of no less than 35 inches (89 cm). The front hoop on an offshore hooped hard TED must have an inside horizontal measurement of at least 40 inches (102 cm) and an inside vertical measurement of at least 30 inches (76 cm). The minimum clearance between the deflector bars and the forward edge of the escape opening must be at least 23¼ inches (59 cm). The measurement between support bars must be no less than 40 inches (102 cm). The clearance between the deflector bars and the forward edge of the escape opening must be no less than 23¼ inches (59 cm)(see Figure 1 for illustrations of the offshore hooped hard TED and its dimensions).

BILLING CODE 3510–22–S

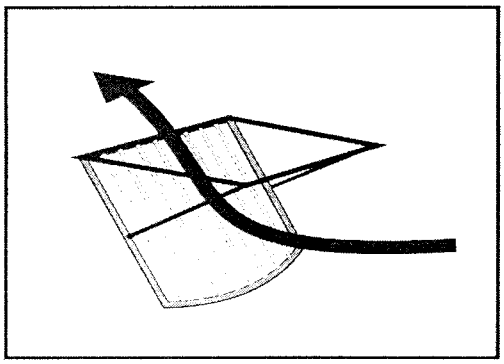

Fig. 1.A. Turtle escape path through offshore hooped hard TED.

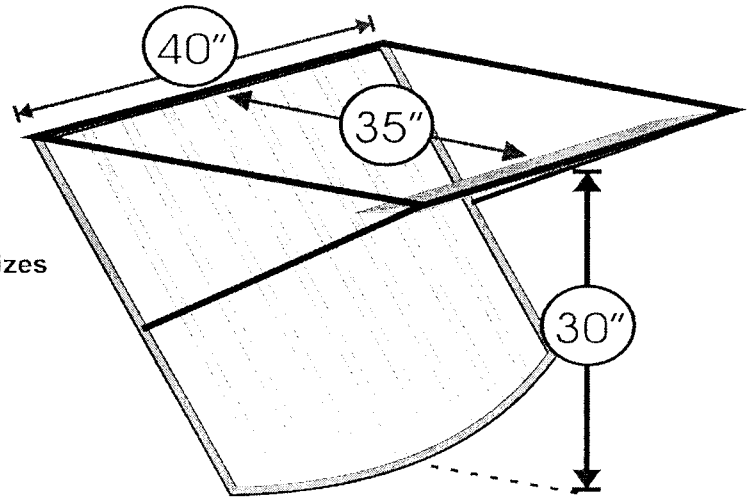

Fig. 1.B. Minimum opening sizes for offshore hooped hard TED.

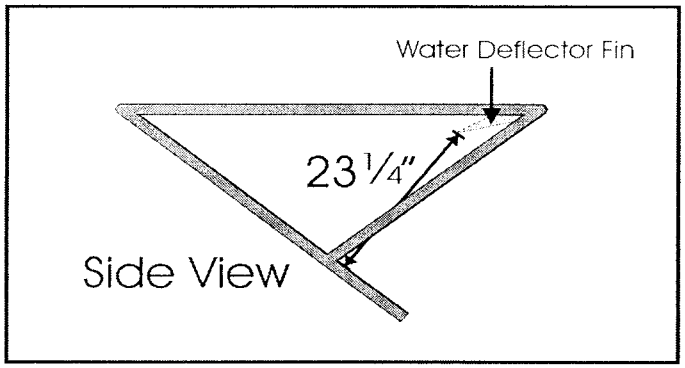

Fig. 1.C. Minimum grid clearance for offshore hooped hard TED, shown with optional water deflector fin.

Figure 1. Illustration of offshore hooped hard TED dimensions, showing optional water deflector fin.

BILLING CODE 3510–22–C

The proposed rule would allow three modifications for hooped hard TEDs. The first is the use of a water deflector fin used to increase shrimp retention. The original Coulon TED design incorporates such a water deflector fin. This fin can be welded onto the forward edge of the escape opening, projecting aft into the TED with an angle of 5 to 45–degrees from the normal, horizontal plane of the trawl. The fin must be constructed of a flat aluminum bar, up to 3/8 inch (0.95 cm) thick and up to 4 inches (10.2 cm) deep. The fin may be as wide as the width of the escape opening, minus 1 inch (2.5 cm).

The second allowable modification will be the use of a webbing flap. The resultant escape opening for the offshore hooped hard TED with a webbing flap must have a stretched mesh circumference of no less than 142 inches (361 cm). The end of the flap cannot extend more than 24 inches (61 cm) past the posterior edge of the frame. This is the same webbing flap allowed for use with single-grid hard TEDs with the 71–inch (180 cm) offshore opening.

The third allowable modification for hooped hard TEDs will be the use of a hinged door frame to partially cover the escape opening. The door must be at least as wide as the escape opening, may be up to 24 inches (61 cm) long, may be covered with taut mesh webbing (the size of the mesh cannot be greater than that used for the TED extension webbing), and must be connected to the forward edge of the escape opening by a hinge device that will allow the door to open upwards freely. The posterior edge of the door frame, in the closed position, must lie at least 12 inches (30 cm) forward of the posterior edge of the escape opening. A water deflector fin may be welded to the posterior edge of the door frame. This fin can be welded onto the forward edge of the escape opening, projecting aft into the TED with an angle of 5–45 degrees from the normal, horizontal plane of the trawl. The fin must be constructed of a flat aluminum bar, up to 3/8 inch (0.95 cm) thick and up to four inches (10.2 cm) deep. The fin may be as wide as the width of the escape opening, minus one inch (2.5 cm). The deflector fin must be no less than 12 inches (30 cm) forward of the posterior edge of the escape opening, when the door is in the closed position. Two stopper ropes or a hinge limiter may be used to limit the maximum opening height of the hinged door frame, as long as the minimum clearance between any part of the deflector bars and any part of the door, including a water deflector fin if installed, in its fully open position is at least 23¼ inches (59 cm) for an offshore hooped hard TED or at least 20 inches (51 cm) for an inshore hooped hard TED. The purpose of the stopper ropes or hinge limiters is to prevent the door frame from opening excessively during net deployment and haulback, possibly resulting in loss of catch or damage to the door. Any stopper ropes or hinge limiters must not restrict the free operation of the door, up to its maximum opening (i.e. the door must be able to easily swing to the required opening height before the stops or limiters affect its movement.) The hinged door cannot be used in combination with a webbing flap or with a water deflector fin attached to the forward edge of the escape opening (See Figure 2 for illustration of the optional hinged door frame, shown with water deflector fin).

BILLING CODE 3510–22–S

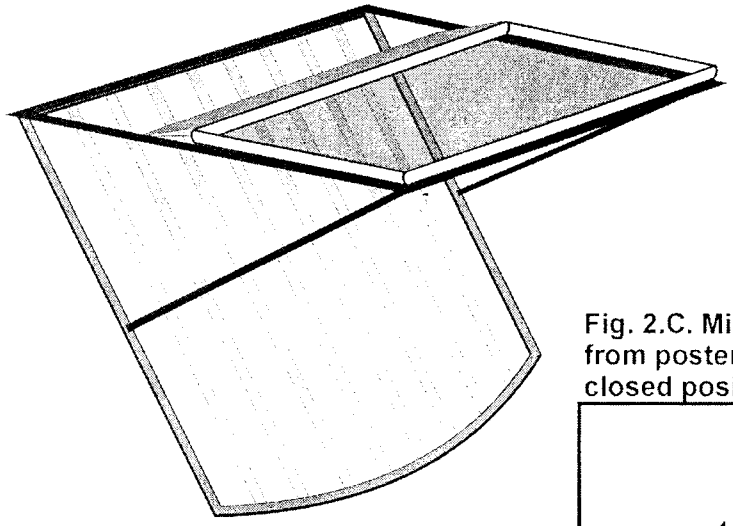

Fig. 2.A.
A perspective view of hooped hard TED with optional hinged door frame.

Fig. 2.C. Minimum clearance of door frame from posterior edge of escape opening in closed position.

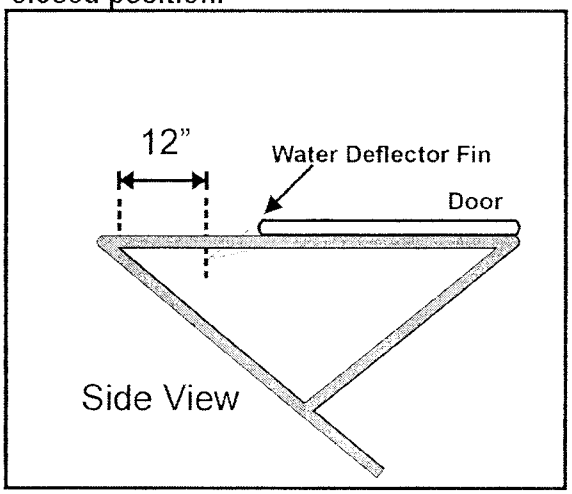

Fig. 2.B. Side perspective view

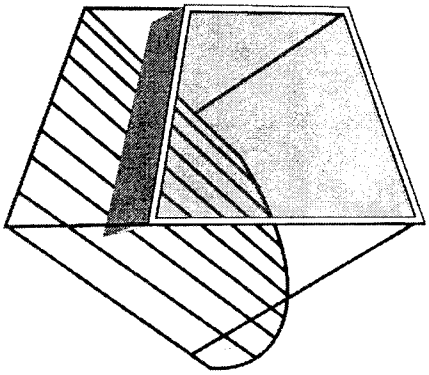

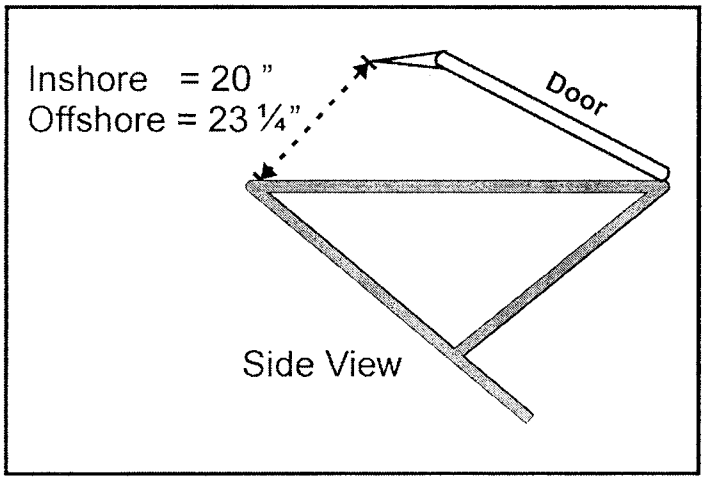

Fig. 2.D. Minimum clearance of door frame from deflector bars; door in fully open position.

Figure 2. Hooped hard TED with optional hinged door frame and water deflector fin.

BILLING CODE 3510–22–C

Classification

This proposed rule has been determined to be not significant for purposes of Executive Order 12866.

The National Marine Fisheries Service (NMFS) prepared an environmental assessment (EA) for this proposed rule that evaluates the potential impact on the environment that may result from the proposed rule. The EA found that the implementation of this proposed rule would not have a significant impact on the quality of the human environment and that the preparation of an environmental impact statement was not necessary. A copy of the EA is available from NMFS (see ADDRESSES).

The Endangered Species Act provides the statutory basis for this proposed rule.

The Chief Counsel for Regulation of the Department of Commerce certified to the Chief Counsel for Advocacy of the Small Business Administration that this proposed rule, if adopted, would not have a significant economic impact on a substantial number of small entities. This proposed rule, if adopted, will not have significant economic impact on a substantial number of small entities because the provisions of the proposed rule would allow fishermen the option of a hooped hard TED design to comply with the TED requirement. Hooped hard TEDs are already in use by some fishermen who prefer the Coulon TED due to its efficiency in releasing both turtles and fish bycatch, while retaining shrimp. As a result, a regulatory flexibility analysis was not prepared.

List of Subjects in 50 CFR Part 223

Endangered and threatened species, Exports, Imports, Marine mammals, Transportation.

Dated: July 25, 2003.

Rebecca Lent,

Deputy Assistant Administrator for Regulatory Programs, National Marine Fisheries Service.

For the reasons set out in the preamble, 50 CFR part 223 is proposed to be amended as follows:

PART 223—THREATENED MARINE AND ANADROMOUS SPECIES

1. The authority citation for part 223 continues to read as follows:

Authority: 16 U.S.C. 1531 *et seq.*

2. In § 223.207, paragraphs (a)(1), (a)(7)(i), and (a)(8)(i) are revised and paragraphs (d)(6) and (d)(7) are added to read as follows:

§ 223.207 Approved TEDs.

(a) *Hard TEDs*. Hard TEDs are TEDs with rigid deflector grids and are categorized as ''hooped hard TEDs'' and ''single-grid hard TEDs'' such as the Matagorda and Georgia TED (Figures 3 & 4 to this part). Hard TEDs complying with the following generic design criteria are approved TEDs:

(1) *Construction materials*—(i) *Single-grid and inshore hooped hard TED*. A single-grid hard TED or an inshore hooped hard TED must be constructed of one or a combination of the following materials, with minimum dimensions as follows:

(A) Solid steel rod with a minimum outside diameter of ½ inch (1.27 cm);

(B) Fiberglass or aluminum rod with a minimum outside diameter of ½ inch (1.27 cm); or

(C) Steel or aluminum tubing with a minimum outside diameter of ½ inch (1.27 cm) and a minimum wall thickness of 1/8 inch (0.32 cm) (also known as schedule 40 tubing).

(ii) *Offshore hooped hard TED*. An offshore hooped hard TED must be constructed of aluminum, with minimum dimensions as follows:

(A) Solid rod with a minimum outside diameter of 5/8 inch (1.59 cm); or

(B) Tubing with a minimum outside diameter of 1 inch (2.54 cm) and a minimum wall thickness of 1/8 inch (0.32 cm).

* * * * *

(7) * * *

(i) *Hooped hard TEDs*. * * *(A) *Escape opening for inshore hooped hard TED*. The inshore hooped hard TED escape opening must have a horizontal measurement of no less than 35 inches (89 cm) wide and a forward measurement of no less than 27 inches (69 cm). A hinged door frame may be used to partially cover the escape opening as provided in paragraph (d)(7) of this section. Alternatively, a webbing flap may be used as provided in paragraph (d)(3)(i) of this section. The resultant opening with a webbing flap must be a minimum width of 35 inches (89 cm) and a minimum height of 20 inches (51 cm), with each measurement taken simultaneously. This opening may only be used in inshore waters, except it may not be used in the inshore waters of Georgia and South Carolina.

(B) *Escape opening for offshore hooped hard TED*. The offshore hooped hard TED escape opening must have a horizontal measurement of no less than 40 inches (102 cm) wide and a forward measurement of no less than 35 inches (89 cm). A hinged door frame may be used to partially cover the escape opening as provided in paragraph (d)(7) of this section. Alternatively, a webbing flap may be used as provided in paragraph (d)(3)(ii) of this section. The resultant escape opening with a webbing flap must have a stretched mesh circumference of no less than 142 inches (361 cm).

* * * * *

(8) * * *

(i) *Hooped hard TEDs*—(A) *Inshore hooped hard TED*. The front hoop on an inshore hooped hard TED must have an inside horizontal measurement of at least 35 inches (89 cm) and an inside vertical measurement of at least 30 inches (76 cm). The minimum clearance between the deflector bars and the forward edge of the escape opening must be at least 20 inches (51 cm).

(B) *Offshore hooped hard TED*. The front hoop on an offshore hooped hard TED must have an inside horizontal measurement of at least 40 inches (102 cm) and an inside vertical measurement of at least 30 inches (76 cm). The minimum clearance between the deflector bars and the forward edge of the escape opening must be at least 23¼ inches (59 cm).

* * * * *

(d) * * *

(6) *Water deflector fin for hooped hard TEDs*. On a hooped hard TED, a water deflector fin may be welded to the forward edge of the escape opening. The fin must be constructed of a flat aluminum bar, up to 3/8 inch (0.95 cm) thick and up to 4 inches (10.2 cm) deep. The fin may be as wide as the width of the escape opening, minus 1 inch (2.5 cm). The fin must project aft into the TED with an angle between 5 and 45 from the normal, horizontal plane of the trawl. On an inshore hooped hard TED, the clearance between the deflector bars and the posterior edge of the deflector fin must be at least 20 inches (51 cm). On an offshore hooped hard TED, the clearance between the deflector bars and the posterior edge of the deflector fin must be at least 23¼ inches (59 cm).

(7) *Hinged door frame for hooped hard TEDs*. A hinged door frame may be attached to the forward edge of the escape opening on a hooped hard TED. The door frame must be constructed of materials specified at paragraphs (a)(1)(i) or (a)(1)(ii) of this section for inshore and offshore hooped hard TEDs, respectively. The door frame may be covered with a single panel of mesh webbing that is taut and securely attached with twine to the perimeter of the door frame, with a mesh size not greater than that used for the TED extension webbing. The door frame must be at least as wide as the TED escape opening. The door frame may be a maximum of 24 inches (61 cm) long. The door frame must be connected to the forward edge of the escape opening

by a hinge device that will allow the door to open outwards freely. The posterior edge of the door frame, in the closed position, must lie at least 12 inches (30 cm) forward of the posterior edge of the escape opening. A water deflector fin may be welded to the posterior edge of the hinged door frame. The fin must be constructed of a flat aluminum bar, up to 3/8 inch (0.95 cm) thick and up to four inches (10.2 cm) deep. The fin may be as wide as the width of the escape opening, minus one inch (2.5 cm). The fin must project aft into the TED with an angle between 5° and 45° from the normal, horizontal plane of the trawl, when the door is in the closed position. The clearance between the posterior edge of the escape opening and the posterior edge of the door frame or the posterior edge of the water deflector fin, if installed, must be no less than 12 inches (30 cm), when the door is in the closed position. Two stopper ropes or a hinge limiter may be used to limit the maximum opening height of the hinged door frame, as long as they do not obstruct the escape opening in any way or restrict the free movement of the door to its fully open position. When the door is in its fully open position, the minimum clearance between any part of the deflector bars and any part of the door, including a water deflector fin if installed, must be at least 20 inches (51 cm) for an inshore hooped hard TED and at least 23¼ inches (59 cm) for an offshore hooped hard TED. The hinged door frame may not be used in combination with a webbing flap specified at paragraph (d)(3) of this section or with a water deflection fin specified at paragraph (d)(6) of this section.

[FR Doc. 03–19375 Filed 7–29–03; 8:45 am]

BILLING CODE 3510–22–S